ITA TUNNELLING AWARDS 2017

PROJECT OF THE YEAR
- UP TO €50 MILLION -

Tunnel Kennedy

Santiago de Chile

Juan Kuster

Technical Manager, Costanera Norte

ITA TUNNELLING AWARDS 2017

Stakeholders

Tunnel Kennedy (Santiago de Chile)

Owner: Ministry of Public Works (MOP)

Concessionaire: Costanera Norte

Project designers: Subterra Ingenieria

Contractors: Gesvial and Sacyr

Chile

ITA TUNNELLING AWARDS 2017

Location

Costanera Norte is the largest urban expressway concessionary in Santiago de Chile, connecting the city from its Western districts to the Eastern part of the city. This expressway has a total length of 43.8 km, divided in two axes: Costanera (36.0 km) and Kennedy (7.8 km).

Tunnel Kennedy is located along the financial centre of the city and its construction is part of the second stage of the program called "Santiago Downtown - East" (SCO2).The tunnel has a length of 1,166 m, involving three emergencies exits.

ITA TUNNELLING AWARDS 2017

Tunnel sections

PROJECT OF THE YEAR - UP TO €50 MILLION -

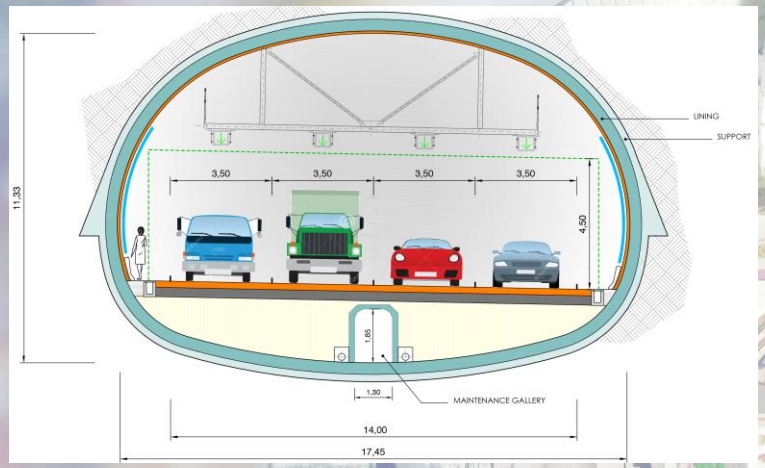

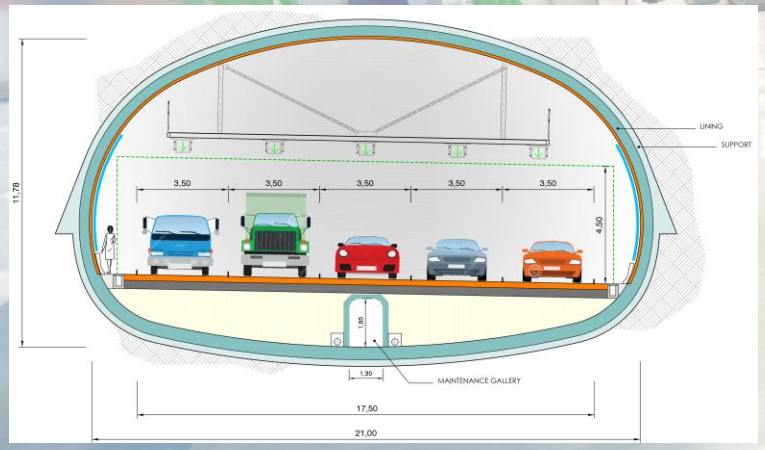

The typical cross section of the tunnel provides four lanes, 3.5 m wide each one, and two shoulders of 0.75 m respectively. Below the pavement a maintenance gallery is provided. The inner dimensions with respect to the lining are 17.45 m wide and 11.30 m height.

At the beginning of the tunnel, there is a connection lane so for around 50 m, a special section of five lanes have been constructed. For this section, the inner dimensions are 21.0 m width and 11.8 m height. An additional section was also envisaged, which was called “4.5 lanes”, designed in order to soften the transition between the sections of five and four lanes.

Geological conditions

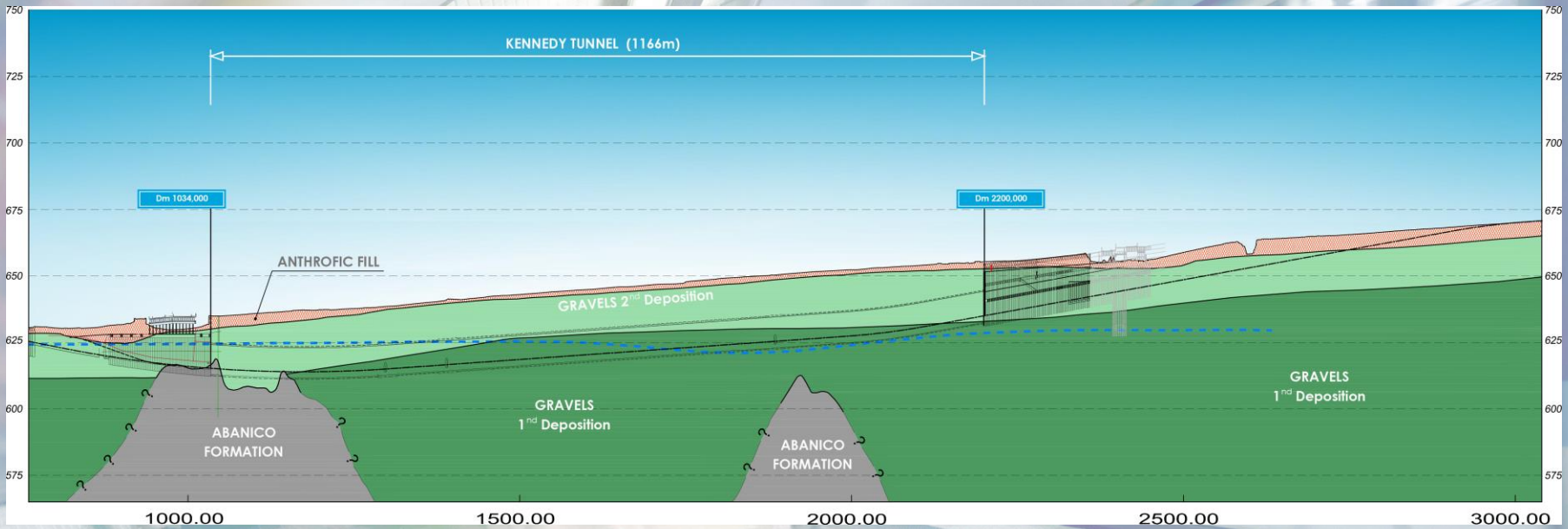

The tunnel was excavated in the alluvial materials (gravels and pebbles) of the Mapocho River, and in the W portal some weathered andesites and tuffs, were encountered.

The water table is located above the tunnel at the Western part, later it passes through the tunnel from its top section to the level of the invert, and finally it continues below the invert until to the end of the tunnel.

The tunnel is located at a high seismicity area, Chilean standards prescribes to consider 0.3g. During the construction an earthquake of magnitude 8.4 Mw in Coquimbo (IV Region), took place (Sept. 16th, 2015).

ITA TUNNELLING AWARDS 2017

Construction Method

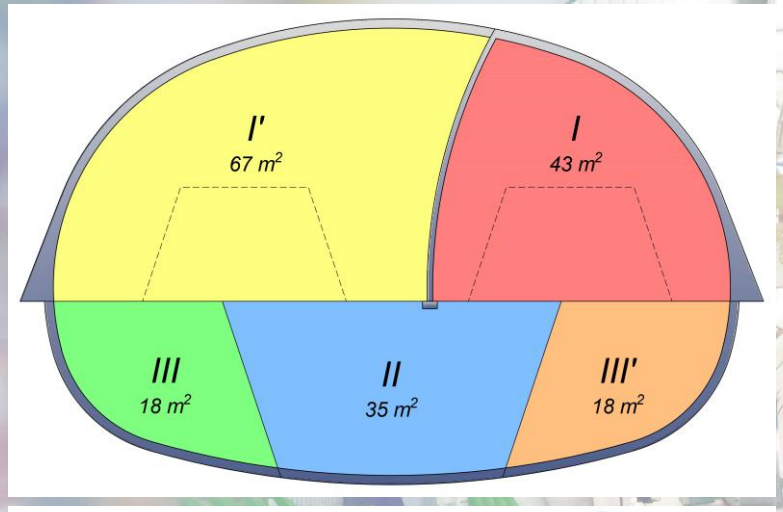

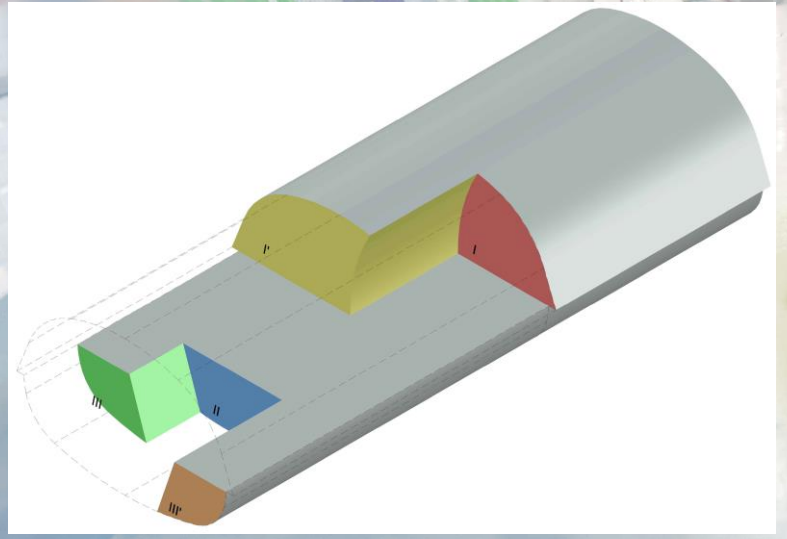

The construction method has been a Sequence Excavation Method, following NATM philosophy, using an elephant foot at the top heading excavation.

The excavation has been done using hydraulic excavator, backhoe and wheel loader.

The support of the typical section consists in a 3 cm shotcrete sealing, HEB-120 steel arches with elephant foot spaced 1.0 m and 27 cm shotcrete Sh35. The face was systematically shotcreted and excavated with a buttress. Occasional canopy tubes were used at sensitive sections.

ITA TUNNELLING AWARDS 2017

Construction phases 4-lane section

ITA TUNNELLING AWARDS 2017

ITA TUNNELLING AWARDS 2017

Construction phases 5-lane section

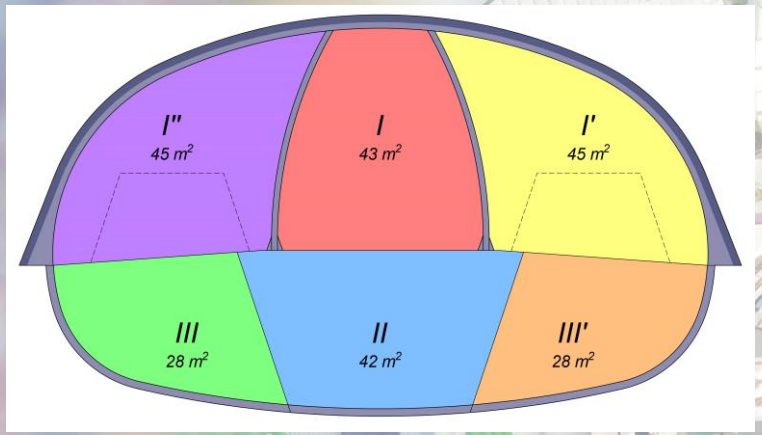

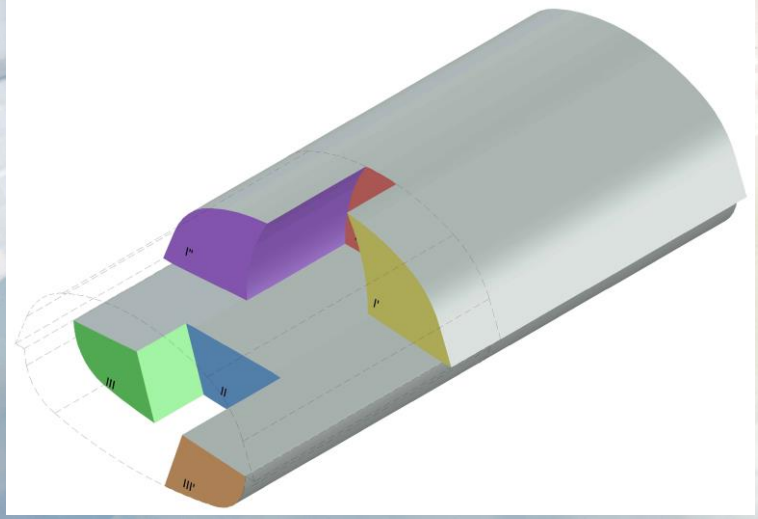

ITA TUNNELLING AWARDS 2017

PROJECT OF THE YEAR
- UP TO €50 MILLION -

ITA TUNNELLING AWARDS 2017

Tunnel Lining

PROJECT OF THE YEAR
- UP TO €50 MILLION -

Finally, and separated from the support by the waterproofing system a reinforced concrete lining was constructed.

Its thickness varies from 20 cm to 40 cm depending on the water column to be resisted. Three different lining sections have been designed and constructed:

- Lining A, 40 cm thick and heavily steel reinforced, for the design water table located above the tunnel vault,
- Lining B, 35 cm thick and with a medium reinforcement, for the design water located from the tunnel vault to its invert, and
- Lining C, 20 cm thick with light reinforcement, for the stretch in which the water table is located below the tunnel invert.

A third lining layer with an homogenous thickness of 10 cm with polypropylene fibres for fire protection was also considered.

In the five lanes section the thickness of the lining will be 50 cm.

ITA TUNNELLING AWARDS 2017

Tunnel Lining

ITA TUNNELLING AWARDS 2017

Western portal

PROJECT OF THE YEAR
- UP TO €50 MILLION -

ITA TUNNELLING AWARDS 2017

Eastern portal

ITA TUNNELLING AWARDS 2017

Results

PROJECT OF THE YEAR
- UP TO €50 MILLION -

The excavation of the tunnel started on October 24th, 2014 and it finished on February 16th, 2017, thus the average advance rate is 1,4 m/day.

The maximum settlement induced at surface have been 12.4 mm at the 4-lane section (Dm1145) and 12.8 mm Dm 1037) at the 5-lane section.

The maximum convergence along the 4-lane section was 14.4 mm (Dm 1465), with a maximum velocity of 3.66 mm/day; with equivalent values for the 5-lane section of 57.52 mm (Dm 1070) and 2.03 mm/day.

Always maximum deformation values were associated to the demolition of the temporary support walls.

ITA TUNNELLING AWARDS 2017

Conclusions

The main challenges during the construction of the Kennedy Tunnel have been:

- The dimensions of the excavation section, over 250 m^2; 23.2 m width.
- The tunnel is entirely excavated in alluvial gravels and partially under the water table, implying several factors such as face stability, canopy tubes, elephant foot, several excavation phases, … to ensure a safety construction.
- The tunnel is located in an urban environmental with an extremely low overburden (10 to 16 m), so the limitation of the induced deformations and the monitoring at surface has been a paramount aspect.
- Because its location, in one of the densest urban areas of Santiago, any affection to the existing surface traffic was not allowed by the Authorities.